Lawrence Berkeley National Laboratory - ALS
One Cyclotron Road
Berkeley CA 94720

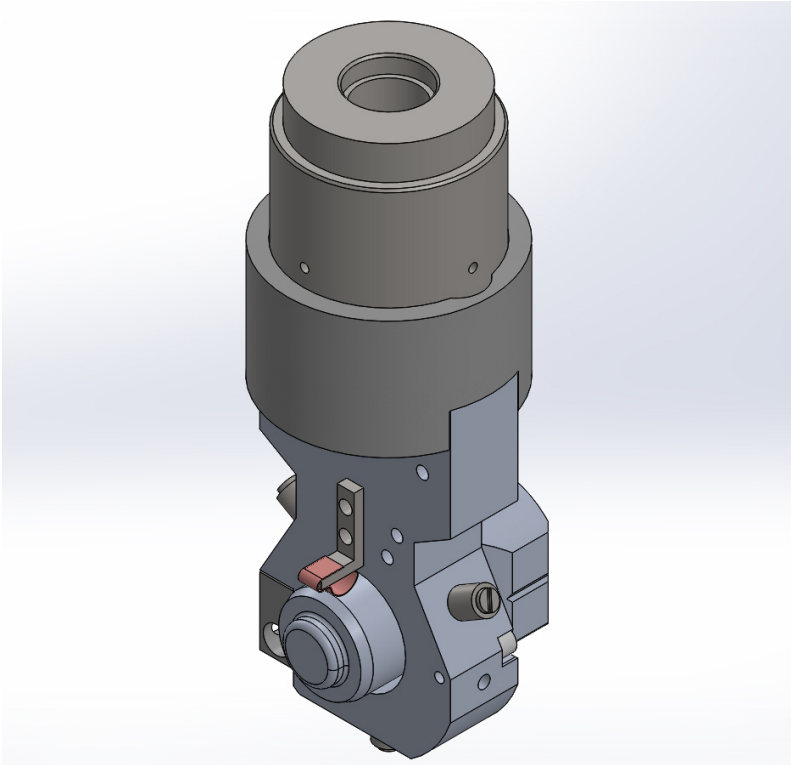

Thermal Analysis of the APEX Photocathode Deposition Mount

Date: Friday, November 22, 2013
Engineer: Jamie Nasiatka
Study name: Cathode Heating - Static
Analysis type: Thermal(Steady state)

Table of Contents

Description

This report is a thermal analysis of the APEX photocathode during coating. The heating is done using a filament suspended inside the cathode body on a translator rod. Temperature of the cathode is measured using a thermocouple attached to a spring clip near the coated face. The mounting is cooled by a standard ALS “Squirt Tube” cooling rod

The steady-state temperature is determined for 25, 50, and 75W of heating. Desired temperatures during coating are typically under 150°C. but can go up to 300-500°C if the cathode surface is annealed.

Assumptions

Original Model

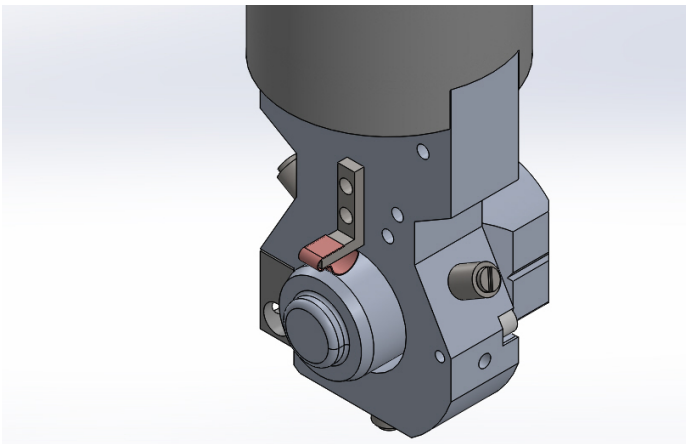

Model Analyzed

For this analysis, the squirt tube assembly was left out – it is assumed that the end of the tube is kept at 20°C and that there's no temperature rise. Previous calculations have shown that for a single pass shell/tube heat exchanger of this style with a typical 1gpm flow rate can easily extract 200W of heat with under 1°C of temperature rise.

It is also assumed that the radiant energy from the heater is distributed evenly across the inside of the cathode plug.

Model Information

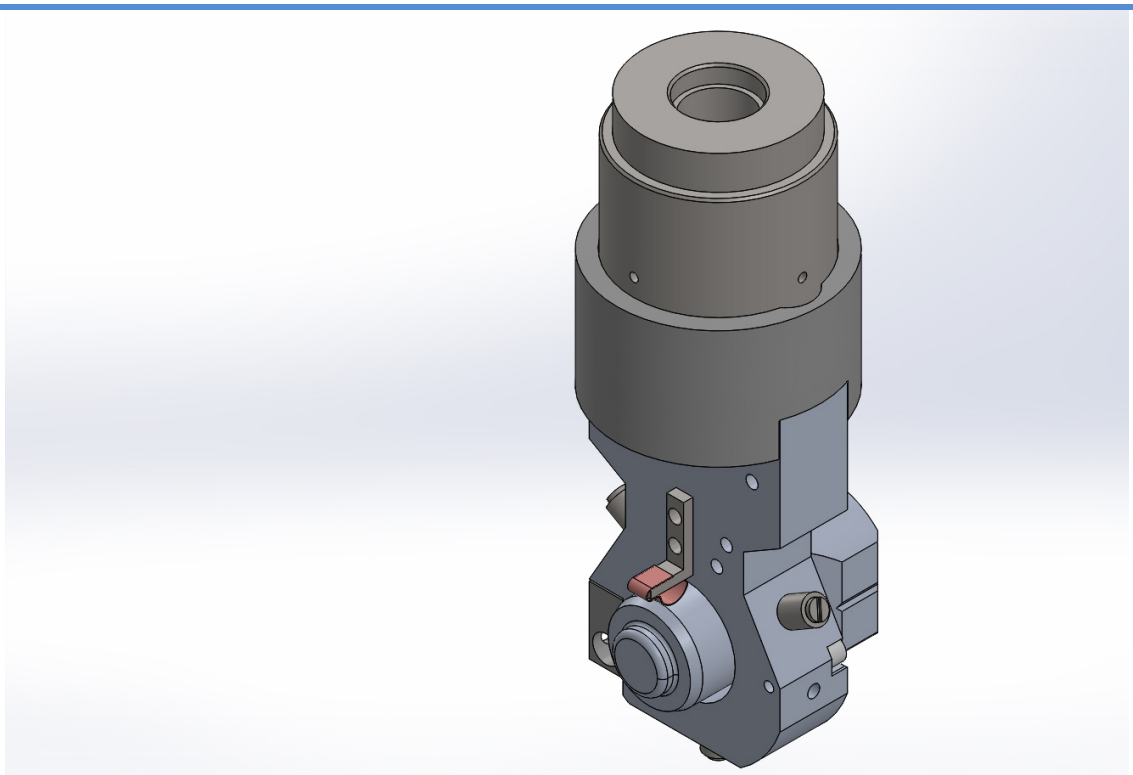

Model name: Deposition Chamber - Cathode Coating Assembly V2
Current Configuration: Default

Study Properties

Study name	Cathode Heating - Static
Analysis type	Thermal(Steady state)
Mesh type	Solid Mesh
Solver type	FFEPlus
Solution type	Steady state
Contact resistance defined?	Yes
Result folder	SolidWorks document (C:\Users\jrnasiatka.LBL\Documents\CAD Files\NGLS Photocathode\Deposition Chamber)

Material Properties

Model Reference	Properties	Components
	Name: AISI 304 **Model type:** Linear Elastic Isotropic **Default failure criterion:** Max von Mises Stress **Thermal conductivity:** 16 W/(m.K) **Specific heat:** 500 J/(kg.K) **Mass density:** 8000 kg/m^3	SolidBody 1(Simplification for FEA)(84805A760-1), SolidBody 1(Simplification for FEA)(84805A760-2), SolidBody 1(Simplification for FEA)(84805A760-3), SolidBody 1(CirPattern6)(Deposition Chamber - Squirt Tube Assembly-1/Deposition Chamber - Sample Support Tube - Base-1), SolidBody 1(#2 Clearance Hole1)(TC Monitoring Assembly-1/TC Mounting Bracket-1)
Curve Data:N/A		
	Name: Alumina **Model type:** Linear Elastic Isotropic **Default failure criterion:** Unknown **Thermal conductivity:** 30 W/(m.K) **Specific heat:** 753 J/(kg.K) **Mass density:** 3960 kg/m^3	SolidBody 1(Cut-Extrude2)(Bias Ring Assembly-1/Bias Ring Mounting Block-1)
Curve Data:N/A		
	Name: OFHC **Model type:** Linear Elastic Isotropic **Default failure criterion:** Unknown **Thermal conductivity:** 390 W/(m.K) **Specific heat:** 390 J/(kg.K) **Mass density:** 8900 kg/m^3	SolidBody 1(Extrude-Thin1)(TC Monitoring Assembly-1/BeCu Finger-1)
Curve Data:N/A		

	**Name:** Beryllium Copper, UNS C17000 **Model type:** Linear Elastic Isotropic **Default failure criterion:** Unknown **Thermal conductivity:** 118 W/(m.K) **Mass density:** 8260 kg/m^3	SolidBody 1(Cut-Revolve2)(Cathode Gripper-1/Cathode-1), SolidBody 1(1/16 (1/16 (CirPattern1)(Cathode Holder - Base Plate-1)
Curve Data:N/A		
	**Name:** 6061 Alloy **Model type:** Linear Elastic Isotropic **Default failure criterion:** Unknown **Thermal conductivity:** 170 W/(m.K) **Specific heat:** 1300 J/(kg.K) **Mass density:** 2700 kg/m^3	SolidBody 1(Fillet1)(Cathode Thermal Isolator Block-1)
Curve Data:N/A		
	**Name:** MACOR Machinable Ceramic **Model type:** Linear Elastic Isotropic **Default failure criterion:** Unknown **Thermal conductivity:** 1.5 W/(m.K) **Specific heat:** 790 J/(kg.K) **Mass density:** 2520 kg/m^3	SolidBody 1(Cut-Extrude2)(Coating Mount - Isolator-1)
Curve Data:N/A		
	**Name:** Aluminum Nitride (AlN) **Model type:** Linear Elastic Isotropic **Default failure criterion:** Unknown **Thermal conductivity:** 180 W/(m.K) **Specific heat:** 753 J/(kg.K) **Mass density:** 3960 kg/m^3	<Material_ComponentList1/>
Curve Data:N/A		

Thermal Loads

Load name	Load Image	Load Details
Temperature-1	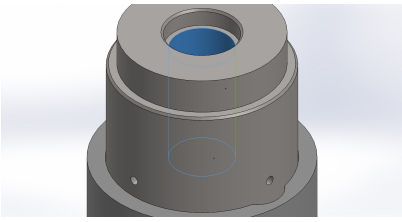	**Entities:** 2 face(s) **Temperature:** 20 Celsius
Heat Power-1	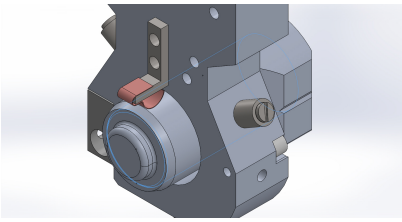	**Entities:** 3 face(s) **Heat Power Value:** 75 W

Study Results

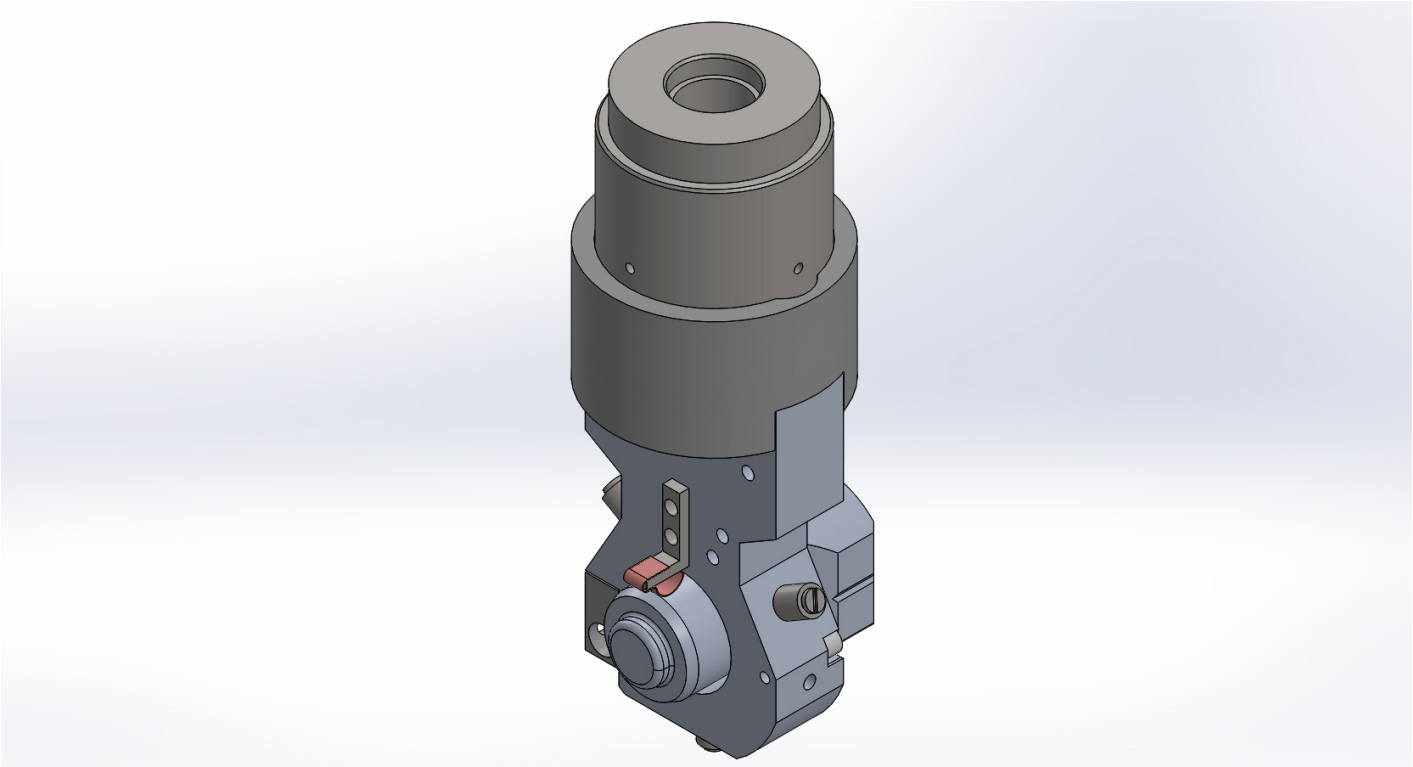

Base Model

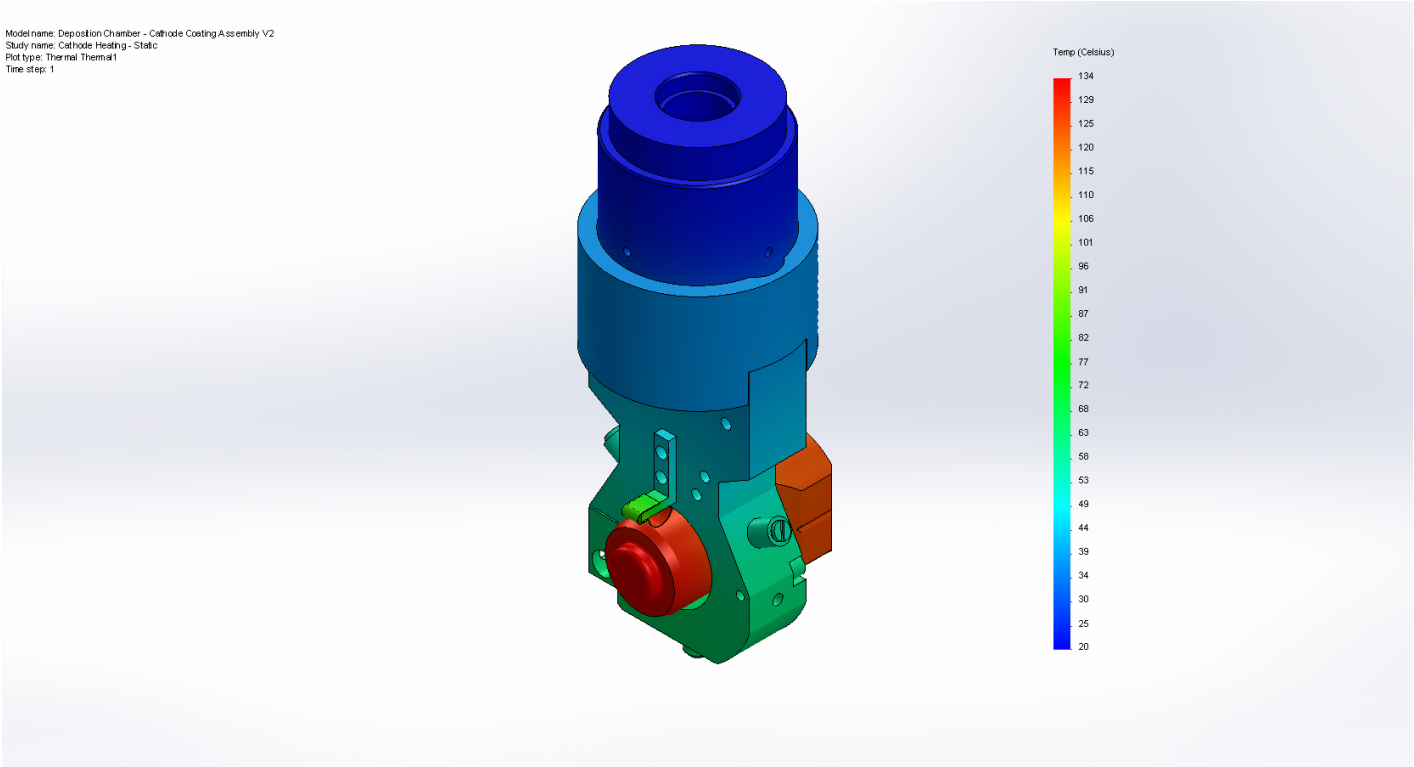

25W Heating – Cathode Face ~135°C

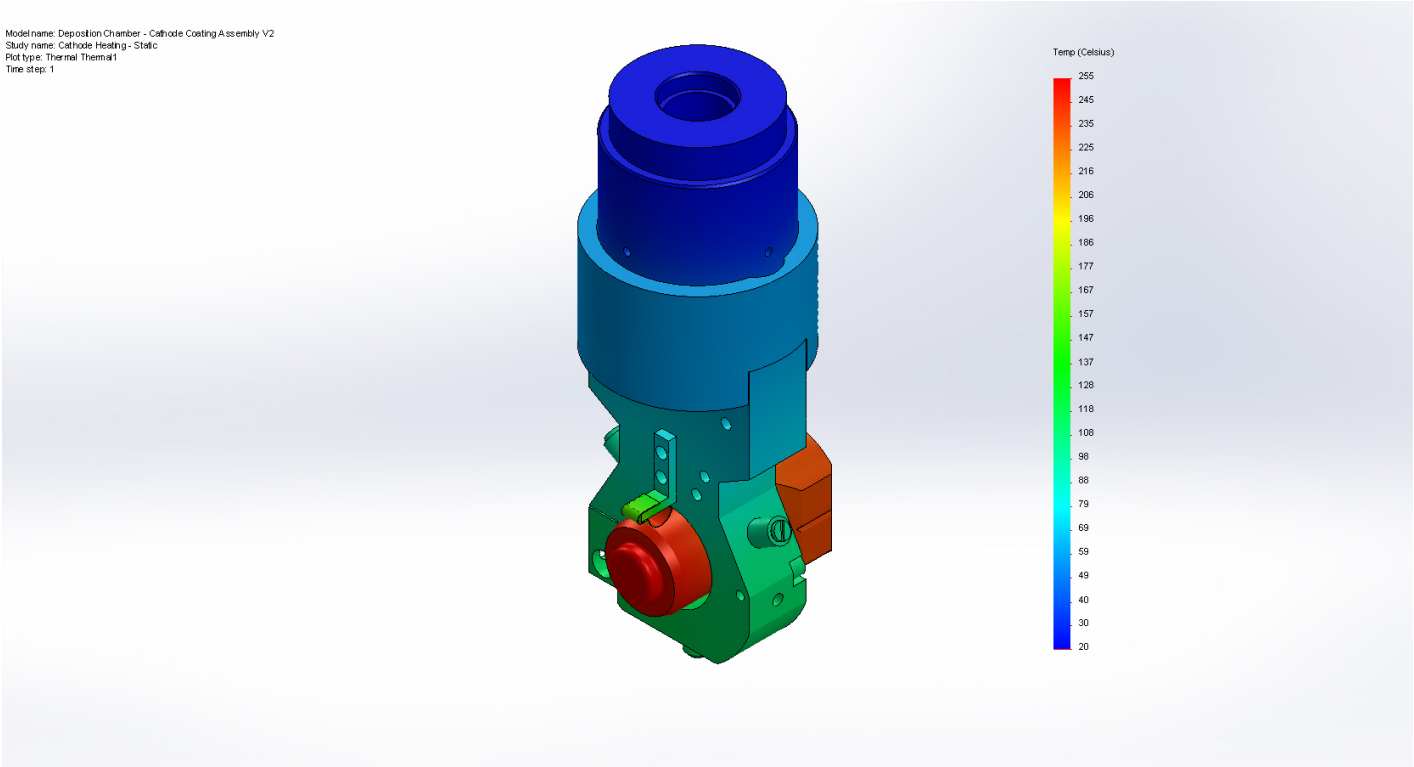

50W Heating – Cathode Face ~250°C

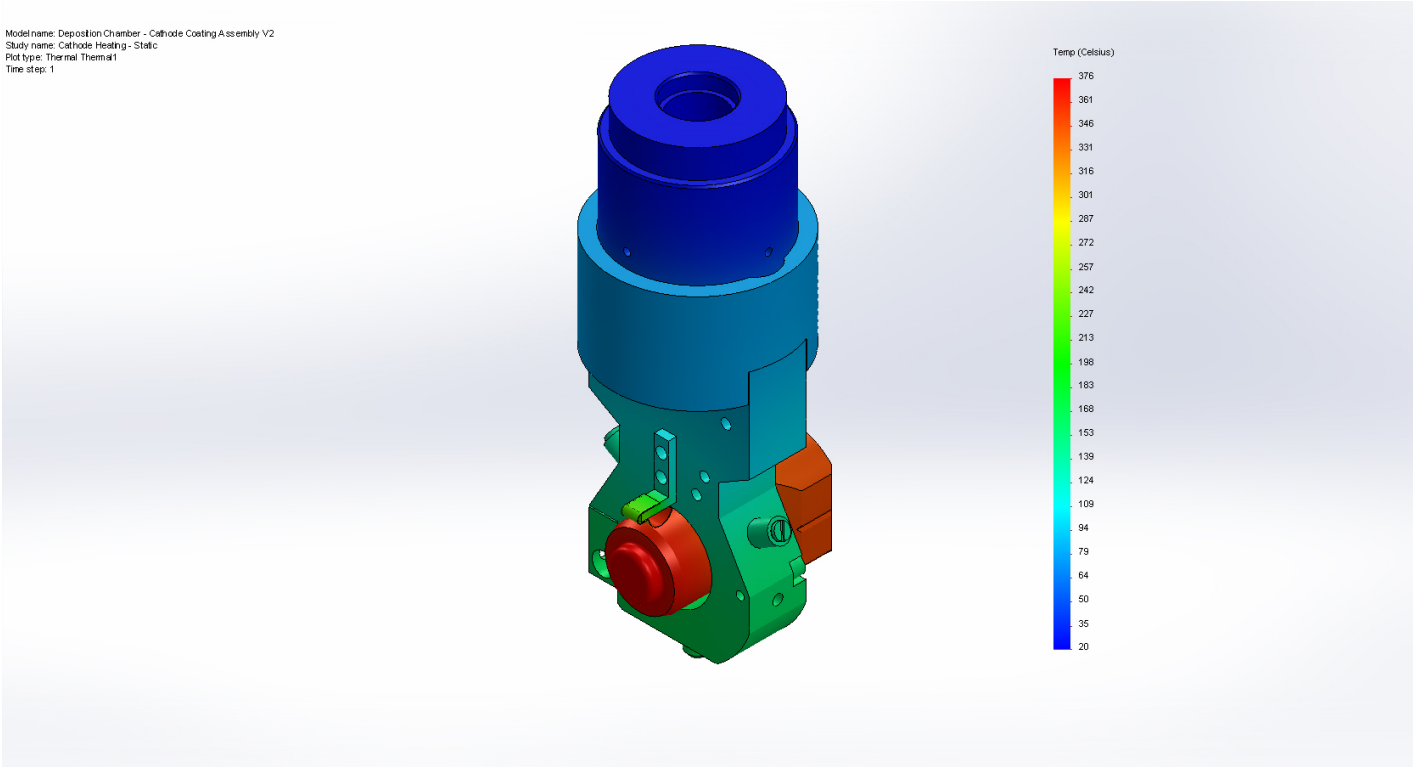

75W Heating – Cathode Face ~375°C

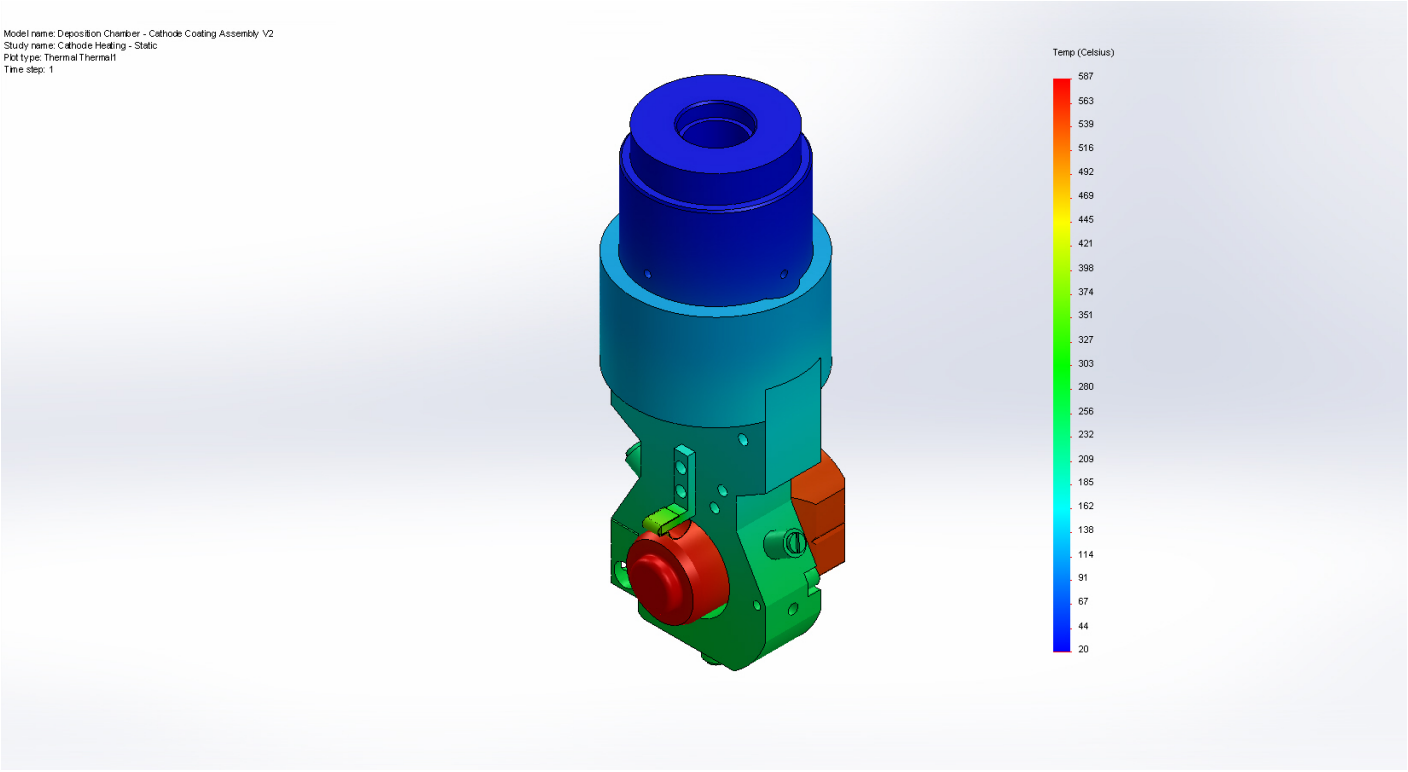

100W Heating – Cathode Face ~590°C

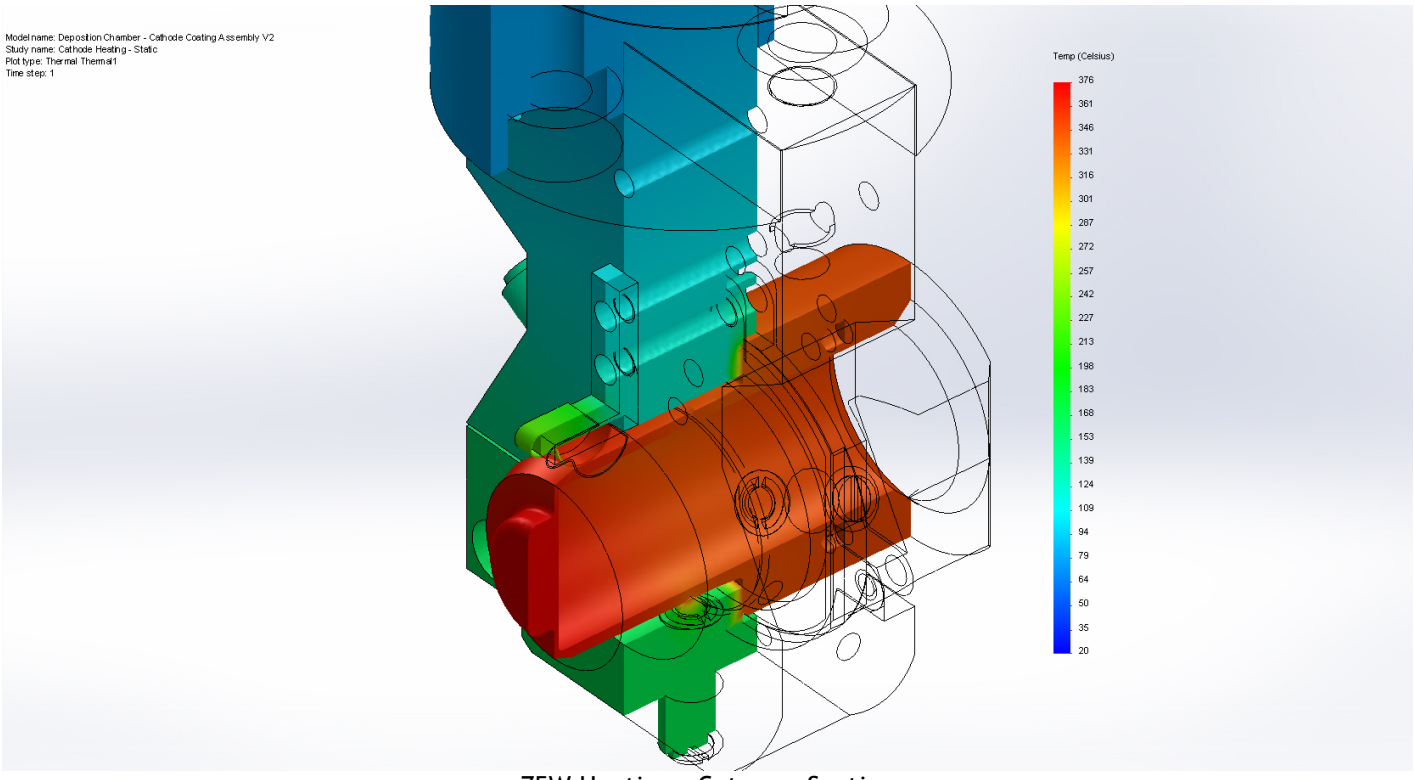

75W Heating – Cutaway Section

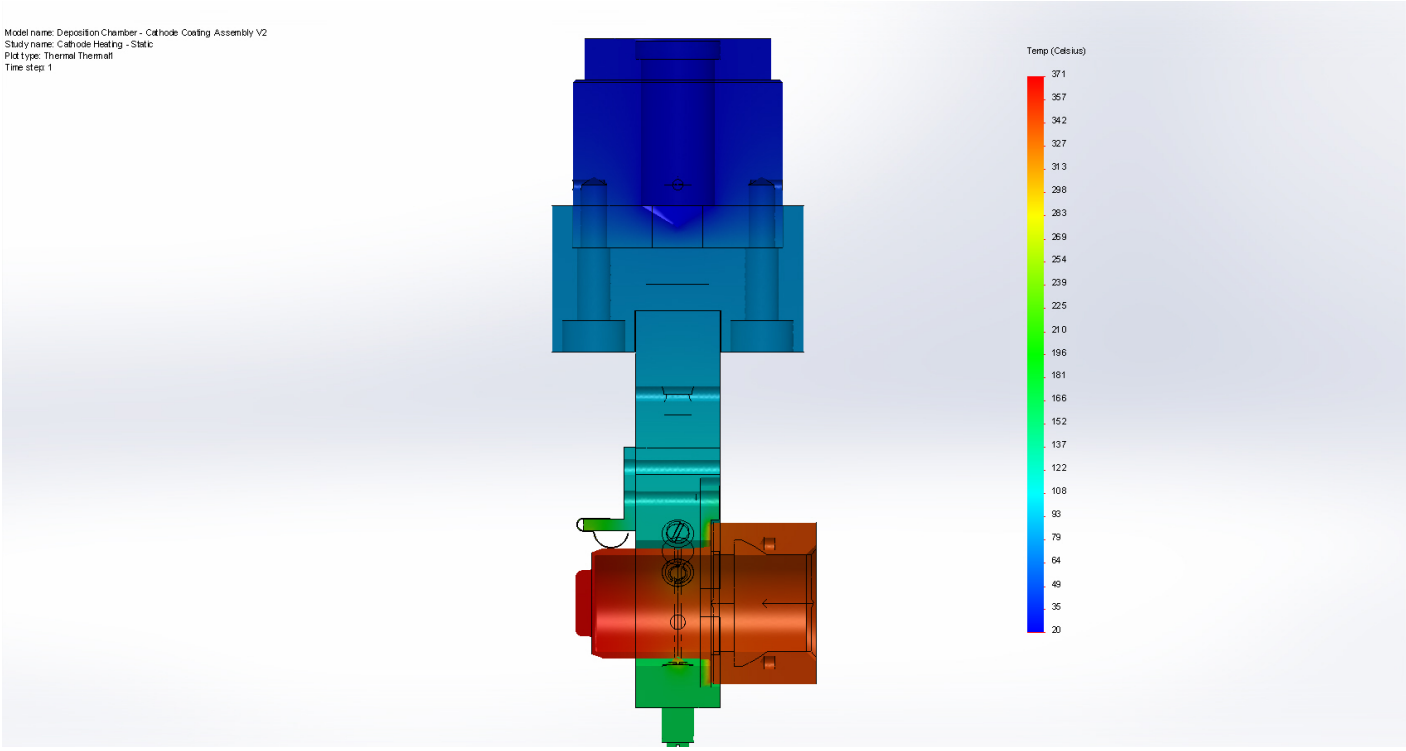

75W Heating – AlN Isolator

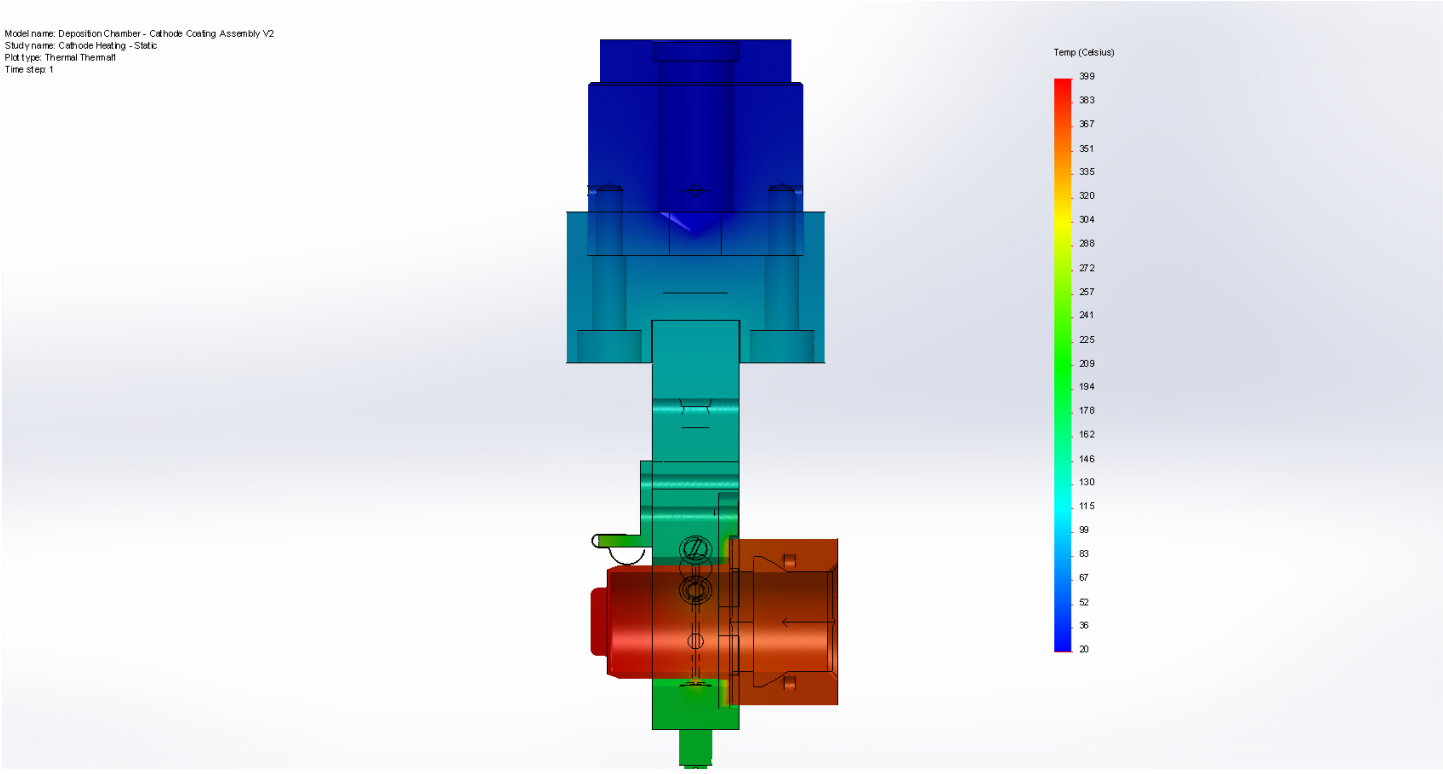

75W Heating – Alumina Isolator

Conclusion

The overall analysis shows that the cathode plug can be heated to the required temperature ranges using less than the full power of the heater (150W.) 25W of heating will give a cathode face temperature of around 135°C – around the expected coating temperatures (100-150°C) 50W will bring the cathode up to around 250°C, and 75W (50% Power) will achieve around 375°C. 100W of heat will bring the cathode temperature to ~590°C – this is above the maximum temperature to be used during cleaning/annealing of a new cathode (500°C) and would easily melt any Aluminum based cathode plugs.

The electrical isolator between the coating mount and the 'squirt tube' was originally specified as Aluminum Nitride (AlN) because of it's high thermal conductivity, however, significant costs and lead times for the material necessitated changing to Alumina (Al_2O_3.)

A second set of analysis were run looking at the effect of changing that material with 75W of input. The overall temperatures increased by around 25°C. The body of the coating mount reaches temperatures in the 120 - 150°C range, higher than desired, but normal operating conditions are going to be much closer to the 25W/135°C range.